Seventh International Workshop on IFSs,
Banská Bystrica, Slovakia, 27 Sept. 2011
NIFS 17 (2011), 4, 21–28

Generalized nets with places, having intuitionistic fuzzy capacities

Krassimir Atanassov[1], Vassia Atanassova[2], Panagiotis Chountas[3] and Anthony Shannon[4]

[1] Dept. of Bioinformatics and Mathematical Modelling
Institute of Biophysics and Biomedical Engineering, Bulgarian Academy of Sciences
105 Acad. G. Bonchev Str., Sofia 1113, Bulgaria
e-mail: krat@bas.bg

[2] Dept. of Intelligent Systems
Institute of Information and Communication Technologies, Bulgarian Academy of Sciences
2 Acad. G. Bonchev Str., Sofia 1113, Bulgaria
e-mail: vassia.atanassova@gmail.com

[3] HSCS, University of Westminster,
Northwick Park, HA1 3TP, London, UK
e-mail: P.I.Chountas@westminster.ac.uk

[4] Faculty of Engineering & IT, University of Technology,
Sydney, NSW 2007, Australia
e-mails: tshannon38@gmail.com, anthony.shannon@uts.edu.au

Abstract: A new extemnsion of the Generalized Net (GN) called "Generalized nets with places, having intuitionistic fuzzy capacities" is introduced. Because this GN is the fifth type of Intuitionistic Fuzzy GNs, for brevity it is named also IFGN5. Algotithms for tokens transfers of the IFGN5s are given. It is proved a theorem, asserting that for each IFGN5 there exists a standard GN that describes the functioning and the results of its work.
Keywords: Generalized net, Intuitionistic fuzzyiness.
AMS Classification: 68Q85.

1 Introduction

Below, we will construct a new type of Generalized Nets (GNs, see [1, 2]). For the aim of our research, we will use the apparatus of the Intuitionistic Fuzzy Sets (IFSs, see [3]). Up to now,

four types of Intuitionistic Fuzzy GNs (IFGNs) are constructed (see [1, 2, 3]). Here a new – five type of IFGNs will be introduced. For brevity, we will note it by IFGN5. These new IFGNs will contain places, having intuitionistic fuzzy capacities.

2 Definition of a generalized net with places, having intuitionistic fuzzy capacities

As a basis of the present definition, we will use the definition of the standard GN from [2]. On the respective place, we willl show the difference between the two (standard and new) definitions. The change in the standard definition is small, but it influence on the forms of some other GN-parameters and on the Algorithm for tokens' transfer in the frames of a given transion, too, and we will discuss it below.

Formally, every GN-transition is described by a seven-tuple (Fig. 1):

$$Z = \langle L', L'', t_1, t_2, r, M, \Box \rangle,$$

where:

(a) L' and L'' are finite, non-empty sets of places (the transition's input and output places, respectively). For the transition in Fig. 1 these are

$$L' = \{l'_1, l'_2, \ldots, l'_m\}$$

and

$$L'' = \{l''_1, l''_2, \ldots, l''_n\};$$

(b) t_1 is the current time-moment of the transition's firing;

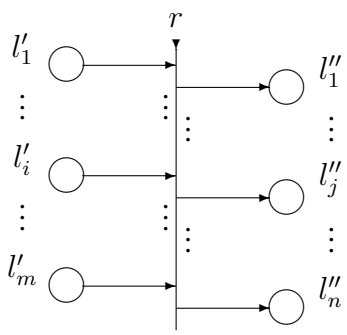

Fig. 1: GN and I-transition

(c) t_2 is the current value of the duration of its active state;

(d) r is the transition's *condition* determining which tokens will pass (or *transfer*) from the transition's inputs to its outputs; it has the form of an Index Matrix (IM; see [4]):

$$r = \begin{array}{c|c} & l''_1 \ \ldots \ l''_j \ \ldots \ l''_n \\ \hline l'_1 & \\ \vdots & \\ l'_i & r_{i,j} \\ \vdots & (r_{i,j} \ - \text{ predicate }) \\ l'_m & (1 \leq i \leq m, 1 \leq j \leq n) \end{array} ;$$

$r_{i,j}$ is the predicate which corresponds to the i-th input and j-th output places. When its truth value is "$true$", a token from i-th input place can be transferred to j-th output place; otherwise, this is not possible;

(e) M is an IM of the capacities of transition's arcs:

$$M = \begin{array}{c|c} & l''_1 \ \ldots \ l''_j \ \ldots \ l''_n \\ \hline l'_1 & \\ \vdots & \\ l'_i & m_{i,j} \\ \vdots & (m_{i,j} \geq 0 - \text{ natural number }) \\ l'_m & (1 \leq i \leq m, 1 \leq j \leq n) \end{array} ;$$

(f) $\Box$ is an object having a form similar to a Boolean expression. It may contain as variables the symbols which serve as labels for transition's input places, and is an expression built up from variables and the Boolean connectives $\wedge$ and $\vee$ whose semantics is defined as follows:

$\wedge(l_{i_1}, l_{i_2}, \ldots, l_{i_u})$ – every place $l_{i_1}, l_{i_2}, \ldots, l_{i_u}$ must contain at least one token,
$\vee(l_{i_1}, l_{i_2}, \ldots, l_{i_u})$ – there must be at least one token in all places$l_{i_1}, l_{i_2}, \ldots, l_{i_u}$, where $\{l_{i_1}, l_{i_2}, \ldots, l_{i_u}\} \subset L'$.

When the value of a type (calculated as a Boolean expression) is "$true$", the transition can become active, otherwise it cannot.

The ordered four-tuple

$$E = \langle\langle A, \pi_A, \pi_L, c, f, \theta_1, \theta_2\rangle, \langle K, \pi_K, \theta_K\rangle, \langle T, t^o, t^*\rangle, \langle X, \Phi, b\rangle\rangle$$

is called a *Generalized Net* (GN) if:

(a) A is a set of transitions;

(b) π_A is a function giving the priorities of the transitions, i.e., $\pi_A : A \to N$, where $N = \{0, 1, 2, \ldots\} \cup \{\infty\}$;

(c) π_L is a function giving the priorities of the places, i.e., $\pi_L : L \to N$, where $L = pr_1 A \cup pr_2 A$, and $pr_i X$ is the i-th projection of the n-dimensional set, where $n \in N, n \geq 1$ and $1 \leq k \leq n$ (obviously, L is the set of all GN-places);

(d) in the definition of the Standard GN, c is a function giving the capacities of the places, i.e., $c : L \to N$. Here, for each place $p \in L$ it determine the intuitionistic fuzzy triple

$\langle c(p), \mu_c(p), \nu_c(p)\rangle$. Its sense is the following. Let $\overline{c}(p)$ be the current number of tokens that stay in place p, i.e, $c(p) \geq \overline{c}(p)$ and let $[x]$ be the integer part of the real positive number x. It is sure that $[\overline{c}(p).\mu_c(p)]$ in number tokens with the highest priorities will have possibility to go out place p, $[\overline{c}(p).\nu_c(p)]$ is the number of tokens that will not have possibility to go out place p in the current transition activation and for the rest $\overline{c}(p) - [\overline{c}(p).\mu_c(p)] - [\overline{c}(p).\nu_c(p)]$ in number tokens will be not clear whether they will go out or not place p. This change in the definition of the Standard GN will reflect on point (g) in the present definition and therefore, on point (c) of the previous definition (for a GN-transition). In the last case, the definition will not be changed. The change will be related only with the values of t_2-components of the respective transitions;

(e) f is a function which calculates the truth values of the predicates of the transition's conditions (for the GN described here let the function f have the value "$false$" or "$true$", i.e., a value from the set $\{0, 1\}$;

(f) θ_1 is a function giving the next time-moment when a given transition Z can be activated, i.e., $\theta_1(Z, t) = t'$, where $pr_3 Z = t, t' \in [T, T + t^*]$ and $t \leq t'$. The value of this function is calculated at the moment when the transition terminates its functioning;

(g) in the definition of the Standard GN, θ_2 is a function giving the duration of the active state of a given transition Z, i. e., $\theta_2(Z, t) = t'$, where $pr_4 Z = t \in [T, T + t^*]$ and $t' \geq 0$. The value of this function is calculated at the moment when the transition starts functioning. Here, for transition Z, containing place $p \in L$ from point (d), $\theta_2(Z)$ will be a number for which the following inequalities must be valid:

$$\theta_2(Z, t) \geq \max_{p \in pr_1 Z} [\overline{c}(p).\mu_c(p)], \tag{1}$$

$$\theta_2(Z, t) \leq \max_{p \in pr_1 Z} (\overline{c}(p) - [\overline{c}(p).\nu_c(p)]). \tag{2}$$

The combination of the two inequalities is correct, because for every place p

$$\overline{c}(p) - [\overline{c}(p).\nu_c(p)] \geq [\overline{c}(p).\mu_c(p)]$$

(h) K is the set of the GN's tokens. In some cases, it is convenient to consider this set in the form

$$K = \bigcup_{l \in Q^I} K_l \ ,$$

where K_l is the set of tokens which enter the net from place l, and Q^I is the set of all input places of the net;

(i) π_K is a function giving the priorities of the tokens, i.e., $\pi_K : K \rightarrow N$;

(j) θ_K is a function giving the time-moment when a given token can enter the net, i.e., $\theta_K(\alpha) = t$, where $\alpha \in K$ and $t \in [T, T + t^*]$;

(k) T is the time-moment when the GN starts functioning. This moment is determined with respect to a fixed (global) time-scale;

(l) t^o is an elementary time-step, related to the fixed (global) time-scale;

(m) t^* is the duration of the GN functioning;

(n) X is the set of all initial characteristics the tokens can receive when they enter the net;

(o) Φ is a characteristic function which assigns new characteristics to every token when it makes a transfer from an input to an output place of a given transition;

(p) b is a function giving the maximum number of characteristics a particular token can receive, i.e., $b : K \rightarrow N$.

When the IFGN5 has only a part of the above components, it is called reduced IFGN5.

In [1, 2] different operations, relations and operators are defined over standard GNs and all they can be transform for the case of IFGN5.

3 Algorithms for transition and IFGN5 functioning

The IFGN5 definition is more complex as than the definition of a Petri net and of the other Petri net modifications, as well as of the ordinary GNs. In a Petri net implementation, parallelism is reduced to a sequential firing of the net transitions and in general the order of their activation is probabilistic or dependent on the transitions' priorities, if ones exist. The GN's algorithms enable a more detailed modelling of the described process. The algorithms for the token's transfers take into account the priorities of the places, transitions and tokens, i.e., they are more precise.

In [2, 4, 5] more detailed algorithm for an ordinary GN-tokens transfer than in [1] is given. Now, following [2, 4, 5], we will introduce the algorithms for transition and IFGN5 functioning.

By analogy with 1,2, some components of the IFGN5's definition were not given above because they are related to the algorithm described below. They are esspecially mentioned in the text.

The algorithm (which we will denote by *algorithm A*) for tokens transfer in the frameworks of a given transition after the time moment $t_1 = TIME$ (the current IFGN5 time-moment) is the same, as for standard GNs. It is the follows:

(A01) Sort the input and output places of the transitions by their priorities.

[An important addition to the GN transition description above, which is related to the software implementation of the transition's functioning, is the following. The tokens from a given input place are divided into two groups. The first one contains those tokens that can be transferred to the transition output, the second contains the rest (the motivation for this will be clear from the next steps of the algorithm). Let the two parts be denoted by "$P_1(l)$" and "$P_2(l)$", respectively, where l is the corresponding place.]

(A02) Sort the tokens from group P_1 of the input places (following the order from A01) by their priorities.

[Let the index matrix R correspond to the index matrix r. Thus, the (i,j)-th element of R is

$$R_{i,j} = \begin{cases} 1, & \textit{if the } (i,j)\textit{-th predicate } r_{i,j} \textit{ is true} \\ 0, & \textit{if the } (i,j)\textit{-th predicate } r_{i,j} \textit{ is false or if the value is} \\ & \textit{determined by A03].} \end{cases}$$

(A03) Assign a value 0 to all elements of R for which either

(a) the input place which corresponds to the respective predicate is empty (the part P_1 is empty); or

(b) the output place which corresponds to the respective predicate is full; or

(c) the current capacity of the arc between the corresponding input and output places is 0.

(A04) The sorted places are passed sequentially by their priority, starting with the place having the highest priority, which has at least one token and through which no transfer has occured on the current time-step. For its highest priority token (from the first list) the predicates corresponding to the relevant row of matrix R are checked. The elements of r, for which the elements of R are not zeros, are calculated.

(A05) Depending on the execution of the operator for permission or prohibition of tokens splitting over the net, the token from step A04 will pass either to all permitted to it output places, or to this very place among them, which has the highest priority. If one token cannot not pass through a given transition on this time interval, it is moved to the second list of tokens of the corresponding place. The tokens, which have entered into the place after the transition activation, are moved into the second list, too.

(A06) The capacities of all output for the transition places, which are input for another, active at the moment transitions, increment with 1 for each token that has left them at this time step.

(A07) The capacities of all output places, in which a token, determined at step A04, has entered, decrement with 1. If the maximum number of tokens for a given output place is reached, the elements of the corresponding column of matrix R are made "0".

(A08) The capacity of all arcs through which a token has passed is decrement with 1. If the capacity of an arc has reached 0, the elements of the corresponding output place of matrix R are given value 0.

(A09) The values of the characteristic function Φ for the output places, in which tokens have entered (formed by the token passed according to step A05) are calculated.

(A10) If there are more places, which could be output ones for tokens at this step, the algorithm returns back to step A04; in the opposite case it proceeds to step A11.

(A11) The current model time t is increased with t^0.

(A12) Is the current time moment equal to or greater than $t_1 + t_2$? If the answer of the question is "no", proceed to step A04, else - termination of the transition functioning.

Below we will describe the most general algorithm for the GN's functioning (denoted by *algorithm B*). For this purpose, we will introduce the concept of *Abstract Transition (AT)*. This

is a transition which is the union of all active GN-transitions at a given time-moment. For its construction the operation "union" of transitions is used (see 4.1).

(B01) Put all tokens α for which $\theta_K(\alpha) \leq T$ into the corresponding input places of the net.

(B02) Construct the GN's AT (initially it is empty).

(B03) Check whether the value of the current time is less than $T + t^*$.

(B04) If the answer to the question in B03 is "no", terminate the GN process.

(B05) Check all transitions for which the first time-component is exactly equal to the current time-moment.

(B06) Check the transition's types of all transitions determined by B05 (the method of checking is as follows:

- change the names of all places' which participate in the Boolean expression of the transition type as variables with values: 0, if the corresponding place has no tokens at the current moment; 1, otherwise;

- calculate the truth value of the so obtained Boolean expression.

(B07) Add all transitions from B06 for which the transition types are satisfied by the AT.

(B08) Apply algorithm A over the AT.

(B09) Remove from AT all transitions which are inactive at the current time-moment.

(B10) Increase the current time with t^0.

(B11) Go to B03.

Obviously, the IFGN5 is an extension of the standard GN, because, if we put $\mu_c(p) = 1$ for each place p (and therefore, $\nu_c(p) = \pi_c(p) = 0$), and if we omit the constraints (1) and (2), we obtain the standard GN. On the other hand, we can formulate and prove the following

THEOREM For each IFGN5 there exists a standard GN that describes the functioning and the results of its work.

So, both types of GNs are equivaled, i.e., the IFGN5s are conservative extensions of the GNs. Finally, we will mention that all existing by the moment GN-extensions are also conservative ones.

4 Conclusion

The so defined type of GNs can be modified in different directions. The idea for these nets, can be combined, e.g., by the ideas for IFGN from first, second, third or fourth type, by coloured GNs, etc. This will be an object of a future research of the authors.

5 Acknowledgements

This work is supported by Royal Society International Joint Project, Ref. No. JP100372 "Generalised net models and intuitionistic fuzzy sets in intelligent systems" and the National Science Fund of Bulgaria by Grant No. DID-02-29 "Modeling Processes with Fixed Development Rules (ModProFix)".

References

[1] Atanassov K., *Generalized Nets*, World Scientific, Singapore, New Jersey, London, 1991.

[2] Atanassov, K., *On Generalized Nets Theory*. Prof. M. Drinov Publishing House, Sofia, 2007.

[3] Atanassov, K. *Intuitionistic Fuzzy Sets: Theory and Applications*. Springer-Verlag, Heidelberg, 1999.

[4] Atanassov, K., D. Dimitrov, V. Atanassov, Algorithms for tokens transfer in different types of intuitionistic fuzzy generalized nets. *Cybernetics and Information Technologies,* Volume 10, No 4, 2010, 22–35.

[5] Dimitrov, D. Optimized algorithm for token transfer in generalized nets. In: *Recent Advances in Fuzzy Sets, Intuitionistic Fuzzy Sets, Generalized Nets and Related Topics,* Vol. 1, Warsaw, SRI PAS, 2010, pp. 63–68.