Sixth Int. Workshop on GNs, Sofia, 17 Dec. 2005, 20-28

Generalised Nets Model for National health Insurance in Bulgaria. Part 2

Violeta Tasseva[1], Desislava Peneva[1], Krassimira Dimova[2],
Elia-El Darzi[3], Panagiotis Chountas[3]

[1]Centre for Biomedical Engineering "prof. Ivan Daskalov"- Bulgarian Academy of Sciences,
Acad. G. Bonchev Str., Bl. 105, Sofia-1113, BULGARIA
e-mails: {violeta, desi}@clbme.bas.bg

[2] 15th Medical Diagnostic and Consultative Center, 20 Nikola Gabrovski Str, Sofia-1172,
BULGARIA

[3]University of Westminster-Health Care Computing Group, HSCS, Northwick Park, London,
HA1 3TP, UK, e-mails: {eldarze, chountp}@ westminster.ac.uk

Introduction

One of the major elements for improving efficiency in the delivery of health care services is optimizing the patient flow and length of stay. On one hand, it is necessary because of the need of fast and effective servicing of the patients. On the other hand is the financial side of the ***Health Services***. That is why a simulation and optimization of the processes that flow inside the health care system are needed. The first step of this task – the modelling of the patient flow between units for outpatient health care – has already done in [1]. In this paper we propose a financial flow model of the same units.

Presentation of the context

Every year between the National Health Insurance Fund (NHIF) and The Bulgarian Medical Doctors' Union and The Union of Dentists in Bulgaria a National framework contract (NFC) is concluded [2]. This contract is national because of its operation on the whole territory of the Republic of Bulgaria and it is framework because it determines health-economical, financial, medical, organisational-administrative, informational and legal-deontological frames in accordance with which the contracts between NHIF and the providers of medical or dental care are concluded. All clauses in NFC are in conformity with operative Bulgarian laws (legislations).

National framework contract founds clauses for guarantee and prosecution of the rights of the obligatory health insured persons in accordance with operative Bulgarian laws – all citizens have equal rights of access to medical care within the frames of the package of medical services guaranteed by the NHIF.

NHIF concludes a contract with a medical care unit, if it has available functioning medical and technical equipment and furnishing in accordance with the procedures as set out in the appendixes of NFC.

This paper discusses structure, functioning, relations and requirements for medical institutions for specialized outpatient healthcare, as well as payment flows between them and patients. By the NFC, NHIF can conclude contract for implementation of outpatient health care with a few types of organizations: group practice, diagnostic consultative centre (DCC), medical

centre (MC), medical- dental centre (MDC) and medical-diagnostic laboratories. The specialized outpatient care includes:

- outpatient care for diagnostic and treatment of a disease;
- health care in case of an accident or sudden disease;
- medical rehabilitation, aiming at development of the physical and/or psychical abilities of the injured man/woman and his compensatory mechanisms, in a way to make him/her able for active participation in life or to contribute for his/her adaptation for independent life;
- consultative care includes:
    - surveillance of women during pregnancy and maternity;
    - surveillance of acute or chronically ill people;
    - treatment at home and prescription of medicines;
    - prevention and early diagnostic of illnesses of the relevant profile;
    - necessity of expensive and specific examination and treatment;
- medical expertise of the working capacity;
- orientation for hospitalization;
- specialized dental care.

The specialized outpatient health care includes: general medical activities, specialized medical activities, high-specialized medical activities, specialized medico- diagnostic examinations, high-specialized medico-diagnostic examinations.

NHIF concludes contracts with health establishments for specialized outpatient care (SOPC) for accomplishment of specialized medical activities by specialities according to ordinances for determining base package of health services, guaranteed by budget of NHIF. Specialized outpatient healthcare is provided to obligatory health insured persons, which have "Referral medical card for consultation or joint treatment" from general practitioner (GP)/ dentist who works in medical institution for primary outpatient healthcare and "Referral card for high-specialized medical activities" from physician/ dentist from medical institution for specialized outpatient healthcare, which has a contract with NHIF. The insurance fee is deducted from the insured person monthly salary that go into the National Health Insurance Fund.

When the patient comes to specialized outpatient healthcare institution the chosen specialist does examination and estimation, which are described in detail (case history and assessment of a new problem) at primary examination and described in brief (staged anamnesis and assessment) at secondary one. The aim of this stage is to estimate the actual status of the patient. According to medical examination outcomes the patient is facing several possibilities: appointing therapy, which can be implemented at home conditions; directing to a consultation with another specialist; dispatching to medical-diagnostic examinations, specialized inpatient healthcare or to activities for rehabilitation. For receiving the healthcare services the patient has to pay minimal customer fee fixed by the NFC. Physicians without speciality are able to perform specialized outpatient medical activities under the leadership of doctors with specialities in the same healthcare institution under contract with NHIF and are answerable for that.

The concepts of generalized nets

Generalized Nets (GNs) [3] are extensions of the Petri nets and other modifications of them. They are tools intended for detailed modelling of parallel processes.

A generalized net is a collection of ***transitions***, defined in turn as a set of ***places*** (see Figure 1). For each transition there is an index matrix with elements – predicates. Some GN-places contain ***tokens*** – dynamic elements entering the net with initial characteristics and getting next ones during their movement in the net. Tokens proceed from the input to the output places of the transitions if the predicate corresponding to these places is evaluated as *"true"*. Every

token has its own identifier and collects its own history that may influence the development of the whole process modelled by the generalized nets.

Two time-moments are specified for the generalized nets: start up and termination of functioning, respectively.

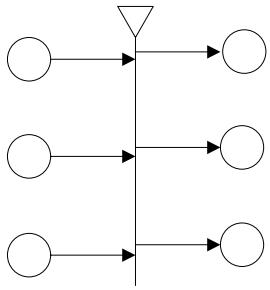

Figure 1: GN transition

A generalized net could have only a part of its components. In this case it is called a reduced GN. Here we shall give the formal definition of a reduced generalized net without temporal components, place and arc capacities, and token, place and transition priorities.

Formally, every transition in the used below reduced generalized net is described by a three-tuple:

$$Z = \langle L', L'', r \rangle,$$

where

(a) L' and L'' are finite, non-empty sets of places (the transition's input and output places, respectively); for the transition these are

$L' = \{l'_1, l'_2, \ldots, l'_m\}$ and $L'' = \{l''_1, l''_2, \ldots, l''_n\}$;

(b) r is the transition's *condition* determining which tokens will pass (or *transfer)* from the transition's inputs to its outputs; it has the form of an Index Matrix (IM):

(c)

$$r = \begin{array}{c|ccccc} & l''_1 & \ldots & l''_j & \ldots & l''_n \\ \hline l'_1 & & & & & \\ \ldots & & & r_{i,j} & & \\ l'_i & & & (r_{i,j} - \text{predicate}) & & \\ \ldots & & & (1 \le i \le m,\ 1 \le j \le n) & & \\ l'_m & & & & & \end{array}$$

$r_{i,j}$ is the predicate that corresponds to the i-th input and j-th output place. When its truth-value is *"true",* a token from the i-th input place transfers to the j-th output place; otherwise, this is not possible.

The ordered four-tuple:

$$E = \langle A, K, X, \Phi \rangle$$

is called a *Generalized Net* if:

(a) A is a set of transitions;
(b) K is the set of the GN's tokens;
(c) X is the set of all initial characteristics, which the tokens could obtain on entering the net;
(d) Φ is the characteristic function that assigns new characteristics to every token when it makes the transfer from an input to an output place of a given transition.

A lot of operations (e.g., union, intersection and others), relations (e.g., inclusion, coincidence and others) and operators are defined over the generalized nets. Operators change the GN-forms, the strategies of token transfer and other. They are of six types: global, local, hierarchical, reducing, extending and dynamic operators.

The GN model

A set of rules for giving a medical aid to a patient, approved by NFC, can be described with the help of the Generalized Nets (Fig.1). Every specialized outpatient healthcare unit has to operate with defined medical and technical equipment to conclude a contract with NHIF. Beyond this minimum the medical unit can dispose of additional apparatuses for specialized examination. This is prerequisite for higher incomes for the medical institution.

In this paper we consider the servicing of an obligatory health insured persons that have to pay only a customer fee for the outpatient health care. This fee is a percentage of the minimal salary in Bulgaria. Every unit has a valuation of the services and examinations that it provides. These valuations are contracted with the National Health Insurance Fund in the NFC. When an insured person needs of health care he pays only the fixed customer fee. The National Health Insurance Fund undertakes the full price of some medical examinations and services. In the paper we only modelled the money flows between the patients and the healthcare units.

The complete GN-model for healthcare providing (Fig. 2) consists of five transitions (Z_1, …, Z_5), which represent respectively: general practitioners, medical institutions for specialized outpatient healthcare, laboratories and centres for specialized analyses, hospital units, centres for rehabilitation. In the model we consider the movement of α-tokens, which represents the patients. Arriving of a new patient is represented by entrance of an α-token in place l. When transition Z_1 is activated one or more β-tokens pass simultaneously to respective exit places for the transition, which correspond to general practitioners: d_1, …, d_{m+1}. Meanwhile α-tokens pass to one or more of the other output places of transition Z_1, representing patient's referral to: specialist, additional analyses, hospital institution or after fixed treatment – discharge home. When the consultation with specialist is needed, α-token moves consecutively into: place l_1; one of the places from s_1, …, s_n, depending on the chosen medical centre for specialized outpatient healthcare and according to the chosen referral from respective specialist; one of the output for the transition places l_5, …, l_7. When additional analyses are required, the α-token goes toward transition Z_3. Transition Z_4 depicts functioning of hospital institutions and transition Z_5 - centres for rehabilitation. The pay-desks of the different units are represented by places m_1, …, m_5. In these places tokens obtain as a characteristic: "the current status of the given pay-desk".

Transition Z_1 represents the process of servicing of patients from a particular general practitioner (GP) and has the following form:

$$Z_1 = <\{l, d_1, \ldots, d_m, l_9, m_1\}, \{d_1, \ldots, d_m, l_1, l_2, l_3, l_4, m_1\}, t_1', t_1''$$

	d_1	…	d_m	l_1	l_2	l_3	l_4	m_1	
l	W_{l_d1}	…	W_{l_dm}	false	false	false	false	true	
d_1	false	…	false	W_{d1_l1}	W_{d1_l2}	W_{d1_l3}	W_{d1_l4}	true	>,
…	…	…	…	…	…	…	…	…	
d_m	false	…	false	W_{dm_l1}	W_{dm_l2}	W_{dm_l3}	W_{dm_l4}	true	
l_9	W_{l9_d1}	…	W_{l9_dm}	false	false	false	false	true	
m_1	false	…	false	false	false	false	false	true	

where:

W_{l_di} = „the patient needs consultation from the i-th doctor”,
W_{dj_l1} = „the patient’s needs consultation from a specialist”,
W_{dj_l2} = „given diagnose requires additional analyses”,
W_{dj_l3} = „the patient needs treatment in a hospital institution”,
W_{dj_l4} = „the therapy given to the patient allows treatment at home”,
W_{l9_dx} = „patient with results of made examinations”,
where: i = {1, …, m}, j = {1, …, m}.

The α-tokens enter place l with initial characteristic: personal data, last and present illnesses, complaints, information for general practitioner and customer fee. Passing to any of places d_1, …, d_m, the token collects medical data such as, given diagnose, prescribed treatment and what decisions are taken. In the GN-model it is possible to set capacities for places d_1, …, d_m, and with a help of elementary time period it is possible to regulate the serving time for a patient.

The characteristic in place l_1 is: „the patient needs health consultation from a specialist” and he has the necessary money for the customer fee. The GP gives patient referral medical card for consultation with a particular type of specialist. The patient makes a personal choice of medical institution for specialized outpatient healthcare and the exact specialist. The consultation can be performed in every district of the present or other settlement in the country. The referral card gives information for the examinations that are done so far as well as some medical conclusions of the general practitioner. It is valid for 30 calendar days.

In place l_2 the tokens obtain as a characteristic “the patient needs of additional examinations in laboratory or with specialized apparatuses for making more precise diagnose or for tracing out the status under chronic disease or supporting treatment; he disposes with the necessary money for the examination fees”. The referral card for medical-diagnostic analyses also can be used within one month period from its grant. The general practitioner disposes of fixed number referral medical cards for consultation or joint treatment, high-specialized medical activities (only for a package “Anaesthesiology and intensive care”), medical-diagnostic analyses according to the control standards and necessities of the health insured persons.

The tokens obtain as a characteristic in place l_3: „the patient needs therapy in specialized hospital institution; he disposes with the necessary money for the fees”. Once again the patient has the choice to find the most suitable medical institution of the specified type in which to admit. Again the referral card for hospital admission has 30 days validity period.

In place l_4 the tokens receive as a characteristic: “diagnose is given and a therapy is appointed”. The characteristic that tokens obtain in place m_1 is: “current status of the given pay-desk”.

Transition Z_2 represents the process of serving a patient form a medical institution for specialized outpatient healthcare and has the following form:

$$Z_2 = <\{l_1, s_1, \ldots, s_n, l_{10}, m_2\}, \{ s_1, \ldots, s_n, l_5, l_6, l_7, l_8, m_2\}, t_2', t_2''$$

	s_1	…	s_n	l_5	l_6	l_7	l_8	m_2
l_1	W_{l1_s1}	…	W_{l1_sn}	false	false	false	false	true
s_1	false	…	W_{s1_sn}	W_{s1_l5}	W_{s1_l6}	W_{s1_l7}	W_{s1_l8}	true
…	…	…	…	…	…	…	...	...
s_n	W_{sn_s1}	…	false	W_{sn_l5}	W_{sn_l6}	W_{sn_l7}	W_{sn_l8}	true
l_{10}	W_{l10_s1}	…	W_{l10_sn}	false	false	false	false	true
m_2	false	…	false	false	false	false	false	true

>,

where:

$W_{l1\_si} = W_{sj\_si}$ = „state of the patients requires a consultation from the i-th specialist”,
W_{sj_l5} = „ given diagnose requires additional analyses”,
W_{sj_l6} = „the patient needs treatment in a hospital institution”,
W_{sj_l7} = „the patient needs treatment in a healthcare unit for rehabilitation”,
W_{sj_l8} = „patient’s given therapy allows treatment at home”,
W_{l10_si} = „there is a patient with results of made examinations”,

where:

$i = \{1, \ldots, n\}$,
$j = \{1, \ldots, n\}$ and
$i \neq j$.

The α-tokens enter place l_1 with initial characteristic: personal data, case history, complaints, results from analyses, conclusions of general practitioner, information for chosen specialist and so on, and customer fee. Passing to any of places $s_1, \ldots, s_n$ the token collects data about what the specialist has done, what diagnose is given by him, what treatment is prescribed and what decisions are taken. After the specialist takes anamnesis and state and formalizes patient’s documentation he has to take decision for necessary therapy. For that purpose a consultation with another specialist can be needed and the patient receives a referral medical card for a new specialist. In the GN-model it is depicted by a cycle for places $s_1, \ldots, s_n$. Once again the referral card has validity within 30 calendar days. In cases when the collected medical information is not sufficient to set a diagnose and to appoint a treatment, the patient is sent for additional examinations, which is shown by an α-token passing to place l_5. The characteristic that token obtains in place l_5 is: “the patient needs additional analyses in laboratory or with specialized apparatuses; he disposes with the necessary money for the examination fees”. Specialists have rights to send patients for high-specialized and high price examinations. The characteristic of a token in place l_6 is: “the patient needs treatment in specialized inpatient healthcare institution; he disposes with the necessary money for the fees”. And in place l_7 the obtained characteristic is: “the patient needs treatment in institution for rehabilitation; he disposes with the necessary money for the fees”. The α-token enters place l_8 when the appointed therapy can be implemented in home conditions and there it receives characteristic: “home treatment”. The characteristic that tokens obtain in place m_2 is: “current status of the given pay-desk”.

Transition Z_3 represents the process of performance of medical-diagnostic activity:

$$Z_3 = <\{ l_2, l_5, u_1, \ldots, u_p, u_{p+1}, \ldots, u_v, l_{13}, m_3\}, \{ u_1, \ldots, u_p, u_{p+1}, \ldots, u_v, l_9, l_{10}, l_{11}, m_3\}, t_3', t_3''$$

	u_1	…	u_p	u_{p+1}	…	u_v	l_9	l_{10}	l_{11}	m_3
l_2	W_{l2_u1}	…	W_{l2_up}	W_{l2_up+1}	…	W_{l2_uv}	false	false	false	true
l_5	W_{l5_u1}	…	W_{l5_up}	W_{l5_up+1}	…	W_{l5_uv}	false	false	false	true
u_1	false	…	W_{u1_up}	W_{u1_up+1}	…	W_{u1_uv}	W_{u1_l9}	W_{u1_l10}	W_{u1_l11}	true
…	…	…	…	…	…	…	…	…	…	…
u_p	W_{up_u1}	…	false	W_{up_up+1}	…	W_{up_uv}	W_{up_l9}	W_{up_l10}	W_{up_l11}	true
u_{p+1}	W_{up+1_u1}	…	W_{up+1_up}	false	…	W_{up+1_uv}	W_{up+1_l9}	W_{up+1_l10}	W_{up+1_l11}	true
…	…	…	…	…	…	…	…	…	...	...
u_v	W_{uv_u1}	…	W_{uv_up}	W_{uv_up+1}	…	false	W_{uv_l9}	W_{uv_l10}	W_{uv_l11}	true
l_{13}	$W_{l13\_u\,1}$	…	$W_{l13\_u\,p}$	$W_{l13\_u\,p+1}$	…	$W_{l13\_u\,v}$	false	false	false	true
m_3	false	…	false	false	…	false	false	false	false	true

>,

where:

W_{li_uj} = „the j-th examination of the patient is needed to be done”,
$W_{ux\_uy} = W_{li\_uy}$,
W_{ui_lk} = „there are results, which have to be returned to: a general practitioner, a specialist, an inpatient healthcare institution”,
where:
$i = \{2, 5, 13\}$,
$j = \{1, \ldots, v\}$,
$x = \{1, \ldots, v\}$,
$y = \{1, \ldots, v\}$,
$k = \{9, 10, 11\}$ and
$x \neq y$.

In places l_2, l_5 and l_{13} entered α-tokens correspond to patients, with characteristics: “necessity of examinations”. The difference between them is the medical institution that required for the examinations. Respectively they are: general practitioner (GP), specialist, healthcare unit. The different units have rights to request for some general analyses and specialized treatments. For example, the medical institutions for specialized outpatient healthcare are allowed to give referral cards for high-specialized analyses.

In places $u_1, \ldots, u_p$ tokens obtain characteristics: “the j-th laboratory examination for the patient is done ”, and in places: $u_{p+1}, \ldots, u_v$ – “the j-th examination with specific apparatuses is done for the patient”, $j = \{1, \ldots, v\}$. The tokens characteristics in places l_9, l_{10} and l_{11} are: “return of the results from analyses”, which are addressed to general practitioners, specialists, inpatient healthcare institutions, depending on the unit that had sent the patient. The characteristic that tokens obtain in place m_3 is: “current status of the given pay-desk”.

Transition Z_4 represents the process of patient admission in hospital unit:

$$Z_4 = <\{ l_3, l_6, l_{11}, h_1, \ldots, h_k, m_4\}, \{ h_1, \ldots, h_k, l_{12}, l_{13}, m_4\}, t_4', t_4''$$

	h_1	…	h_k	l_{12}	l_{13}	m_4
l_3	W_{l3_h1}	…	W_{l3_hk}	false	false	true
l_6	W_{l6_h1}	…	W_{l6_hk}	false	false	true
l_{11}	W_{l11_h1}	…	W_{l11_hk}	false	false	true
h_1	false	…	W_{h1_hk}	W_{h1_l12}	W_{h1_l13}	true
…	…	…	…	…	…	…
h_k	W_{hk_h1}	…	false	W_{hk_l12}	W_{hk_l13}	true
m_4	false	…	false	false	false	true

>,

where:
W_{li_hj} = „it is necessary for the patient to be hospitalized in the j-th unit for an inpatient healthcare”,
$W_{hx\_hy} = W_{li\_hy}$,
W_{hi_l12} = „there is a necessity for additional examinations to be made”,
W_{hi_l13} = „possibility for patient discharge from a hospital”,
where:
$i = \{3, 6, 11\}$,
$j = \{1, \ldots, k\}$,
$x = \{1, \ldots, k\}$,
$y = \{1, \ldots, k\}$ and
$x \neq y$.

The characteristics of places $h_1, \ldots, h_k$ are: "admission for treatment in the j-th inpatient healthcare unit; the patient disposes with the necessary money for the fees", where: $j = \{1, \ldots, k\}$. In place l_{13} tokens obtain as a characteristic: "discharge of the patient". The characteristic that tokens obtain in place m_4 is: "current status of the given pay-desk".

Transition Z_5 represents the process of patient admission in a medical clinic for rehabilitation:

$$Z_5 = <\{l_7, r_1, \ldots, r_q, m_5\}, \{ r_1, \ldots, r_q, l_{14}, m_5\}, t_5', t_5''$$

	r_1	…	r_q	l_{14}	m_5
l_7	W_{l7_r1}	…	W_{l7_rq}	false	true
r_1	false	…	W_{r1_rq}	W_{r1_l14}	true
…	…	…	…	…	…
r_q	W_{rq_r1}	…	false	W_{rq_l14}	true
m_5	false	…	false	false	true

>,

where:

W_{l7_rj} = „it is required for the patient to be hospitalized in the j-th unit for rehabilitation",
$W_{rx\_ry} = W_{l7\_hy}$,
W_{rj_l14} = „ possibility for discharge of the patient",

where:

$j = \{1, \ldots, q\}$,
$x = \{1, \ldots, q\}$,
$y = \{1, \ldots, q\}$ and
$x \neq y$.

The characteristics which the tokens obtain in places $r_1, \ldots, r_q$ are: "admission for treatment in the j-th rehabilitation institution; the patient disposes with the necessary money for the fees", where $j = \{1, \ldots, q\}$. In place l_{14} tokens obtain as a characteristic: "patient's discharge". The characteristic that tokens obtain in place m_5 is: "current status of the given pay-desk".

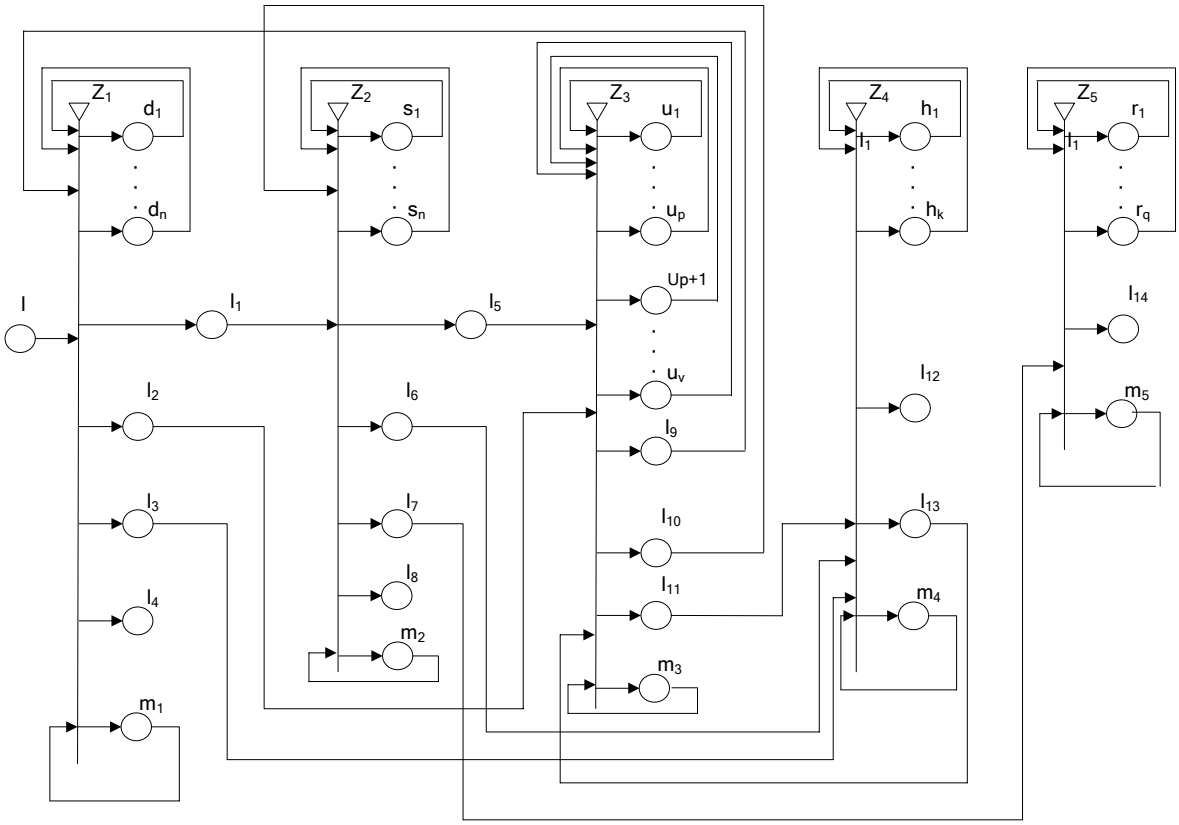

Fig. 2. GN simulation model

Conclusion

The GN model of the health care units' relationships can be used to test (and re-design) the current systems in order to improve management of the diagnostic consultative centres, to reduce the patients' waiting times and to avoid congestion and blockage. The described above simulation model gives an opportunity for alternative designs evaluation and planning of hospital resources and apparatuses with the purpose of increasing the efficiency and improving the delivery of healthcare services. The GN-model gives an opportunity for simulation of available financial resources reallocation. An objective for further investigations will be the information flows in the healthcare system.

References

[1] DKC 1
[2] www.nhif.bg, National framework contract.
[3] Atanassov, K. 1991. Generalized Nets. World Scientific, Singapore.